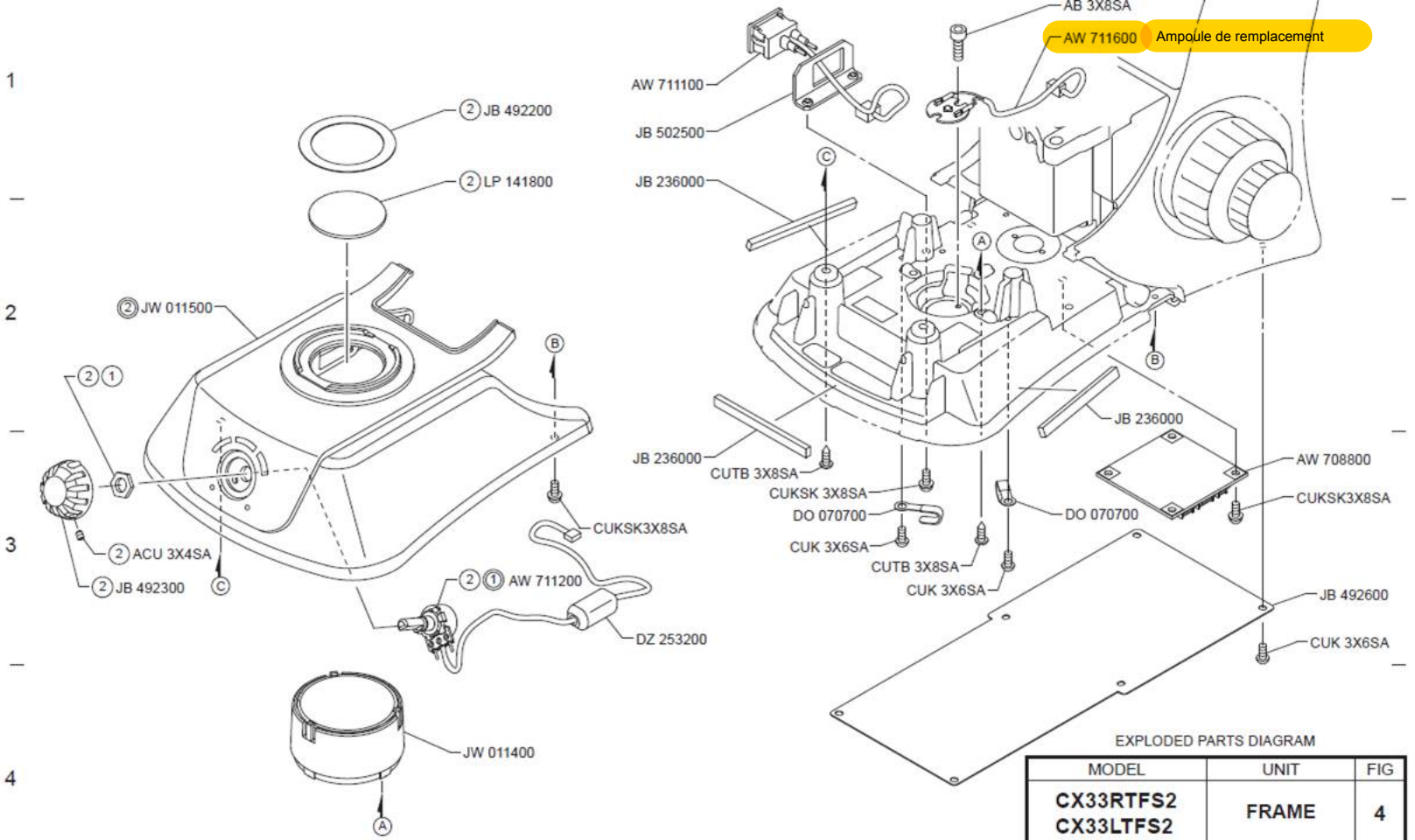

EXPLODED PARTS DIAGRAM

MODEL	UNIT	FIG
CX33RTFS2 CX33LTFS2	FRAME	4

OLYMPUS CORPORATION TOKYO, JAPAN

B116-02F04R1

JR 1596, JR 1597
BINDER No.116-02